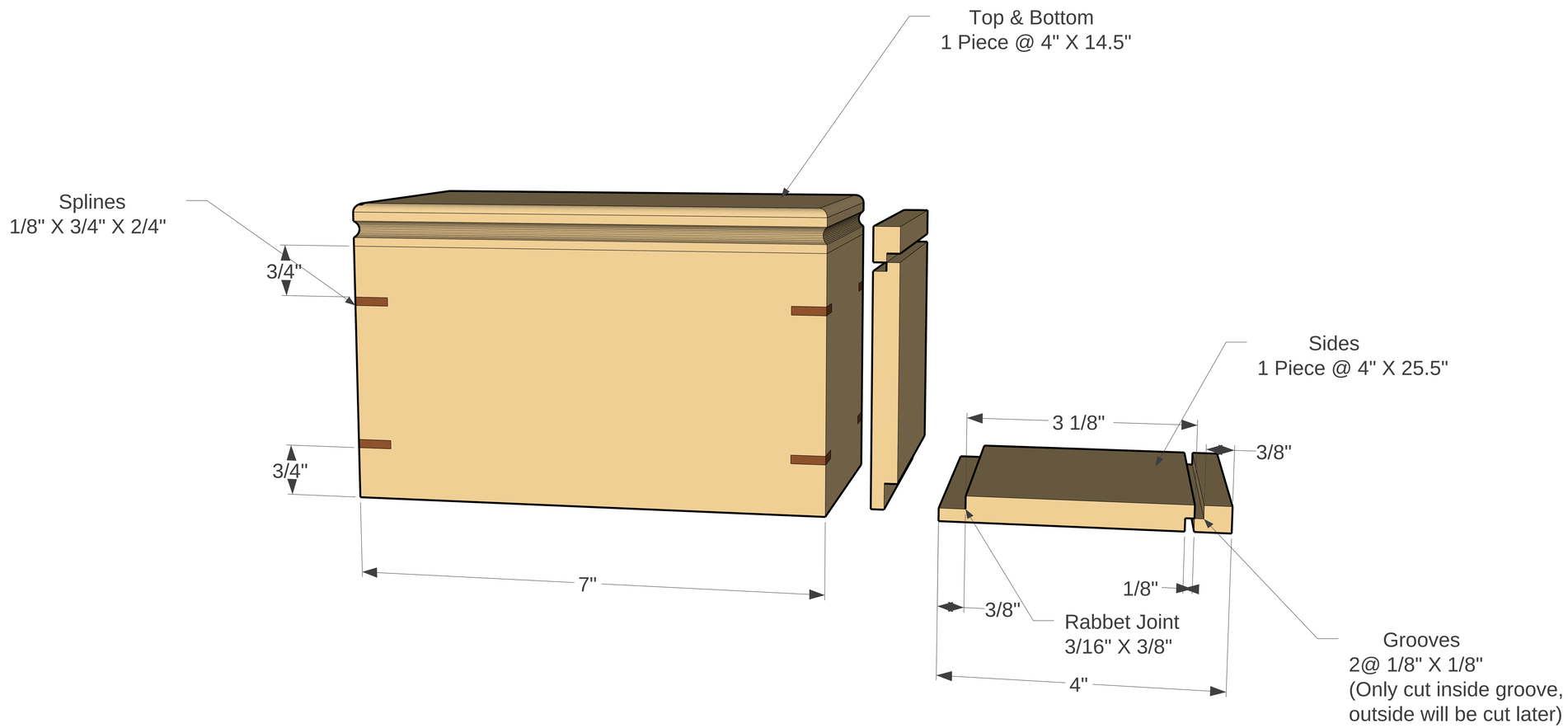
Top & Bottom
1 Piece @ 4" X 14.5"
Splines
1/8" X 3/4" X 2/4"
3/4"
3/4"
7"
Sides
1 Piece @ 4" X 25.5"
3 1/8"
3/8"
1/8"
3/8"
Rabbet Joint
3/16" X 3/8"
4"
Grooves
2@ 1/8" X 1/8"
(Only cut inside groove,
outside will be cut later)